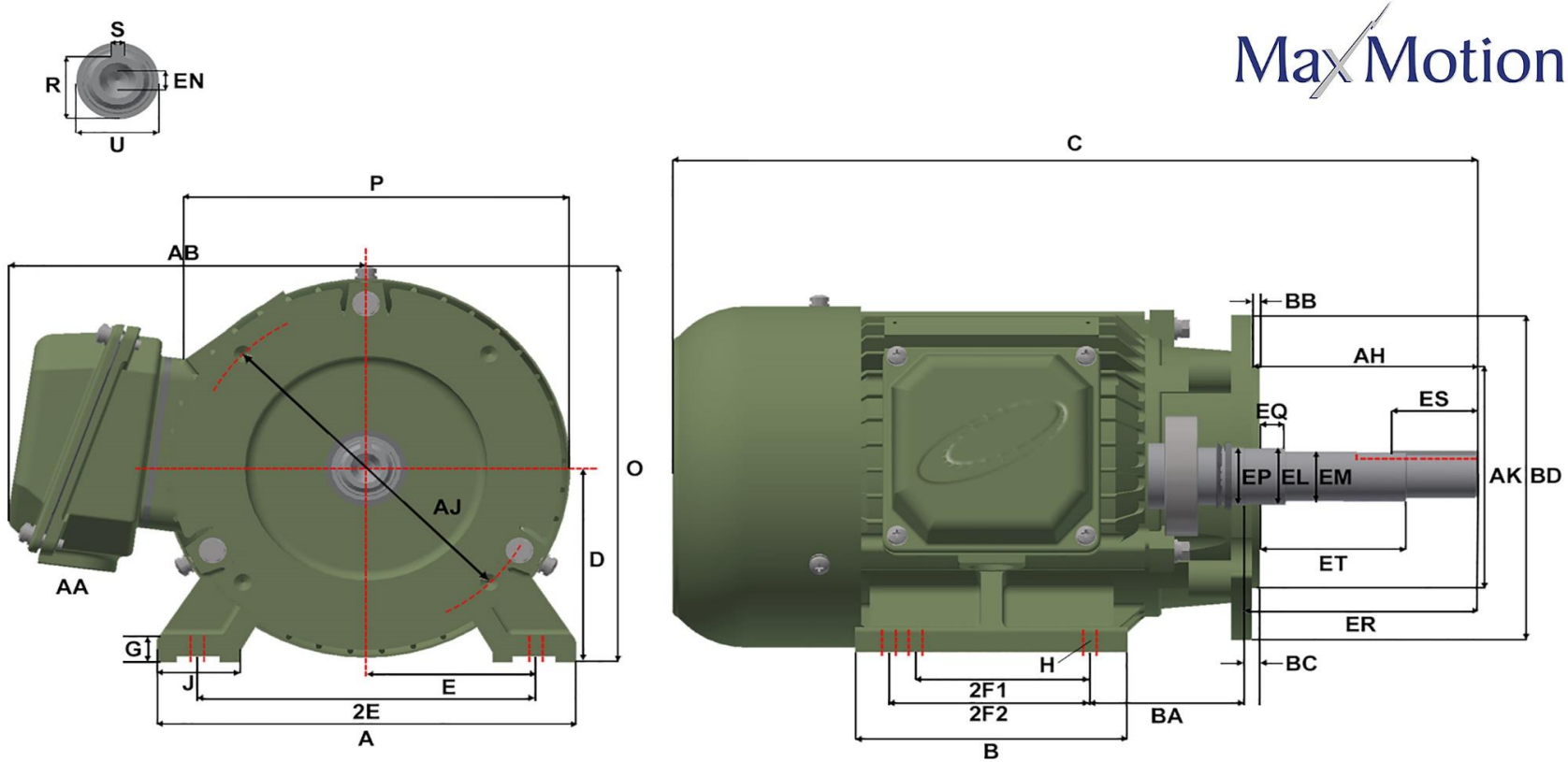

Version: 1WTI			Revised: 01-04-2020			HP	RPM	FRAME	ENCLOSURE	JMPP/JMQP-7			
Customer is responsible in determining that MEP product will fit/perform suitably in the intended application						1,5	1800	145JM	TEFC				
A	B	C	D	E	2E	2F1	2F2	G	H	J	O	P	R
7.00	6.20	17.23	3.50	2.75	5.50	4.00	5.00	0.50	0.34	1.40	7.10	6.95	0.771-0.756
S	U	AA	AB	AH	AJ	AK	BA	BB	BC	BD	EL	EM	EN
0.190-0.188	0.8740-0.8745	0.75	6.10	4.25	5.875	4.500-4.497	2.75	0.156-0.125	0.12	6.62	1.156-1.154	1.0000-0.9995	3/8-16
EP	EQ	ER	ES	ET									
1.18	0.640-0.610	4.281-4.219	1.65	2.890-2.860									